ASSEMBLY INSTRUCTIONS

MODEL: BE25543-BS

Read this instruction carefully. Refer hardware and furniture parts list for guidance. Be sure all parts are complete before assembling. Place all wooden furniture part on a clean and flat soft surface to prevent scratches. Refer steps provided as assembling guide.

PART LIST		
ITEM	DESCRIPTION	QTY
A	Cushion Seat	1 PC
B	Leg	4 PCS
C	Stretcher	4 PCS
D	Apron with swivel plate	1 PC

HARDWARE LIST		
ITEM	DESCRIPTION	QTY
1	JCBC Screw M6 x 25MM	4 PCS
2	JCBC Screw M6 x 50MM	8 PCS
3	Spring Washer M6 x 13MM	8 PCS
4	Flat Washer M6 x 16.5MM	8 PCS
5	Allen Key Small M4 x 110MM	1 PC
6	CSK Screw M4 x 38mm	8 PCS

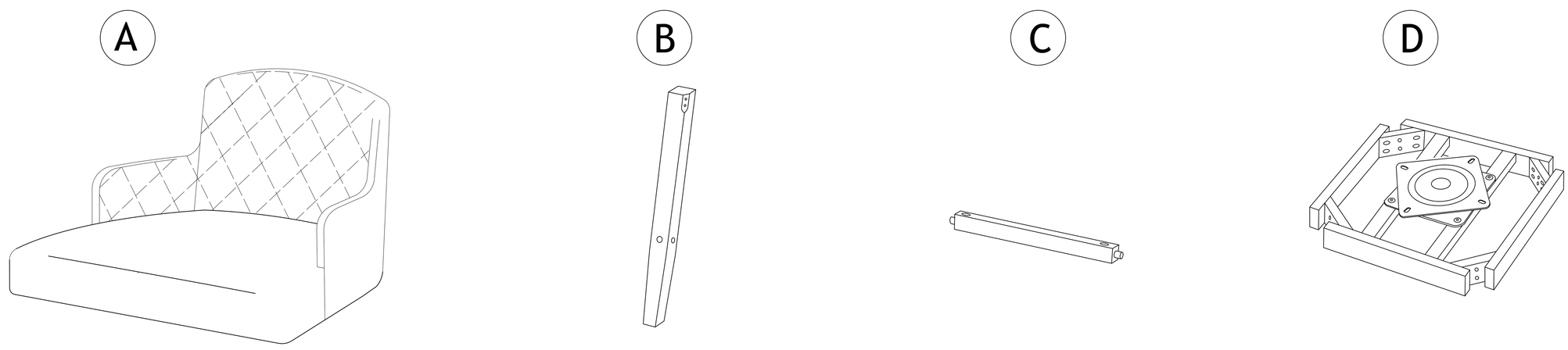

STEP 1

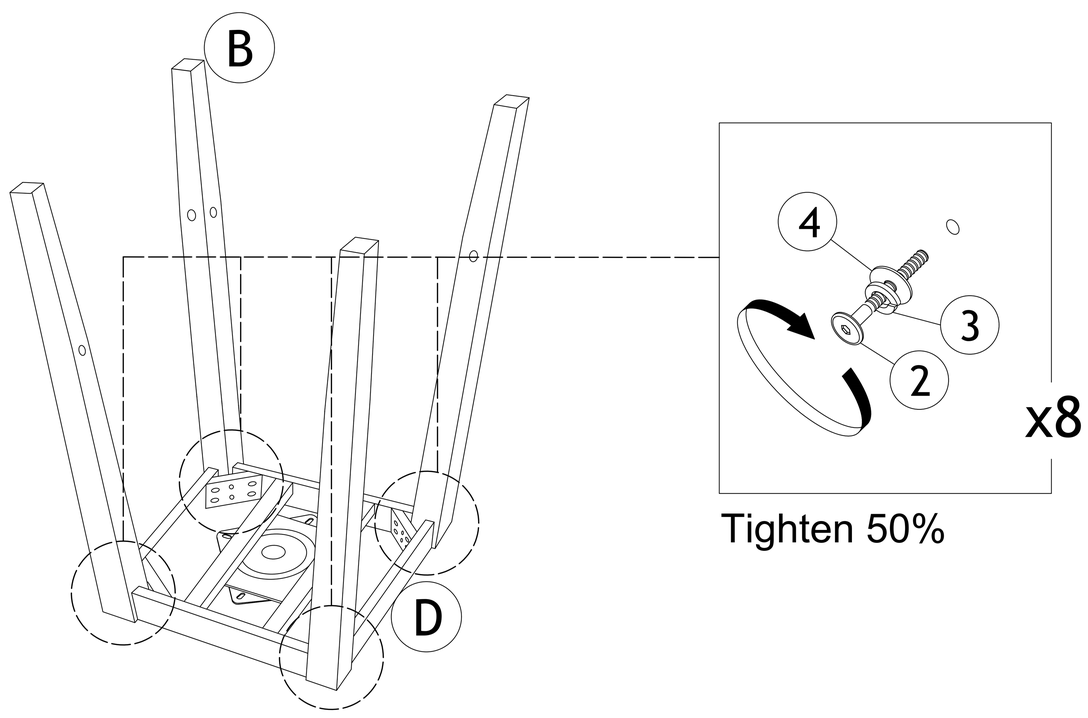

Tighten 50%

STEP 2

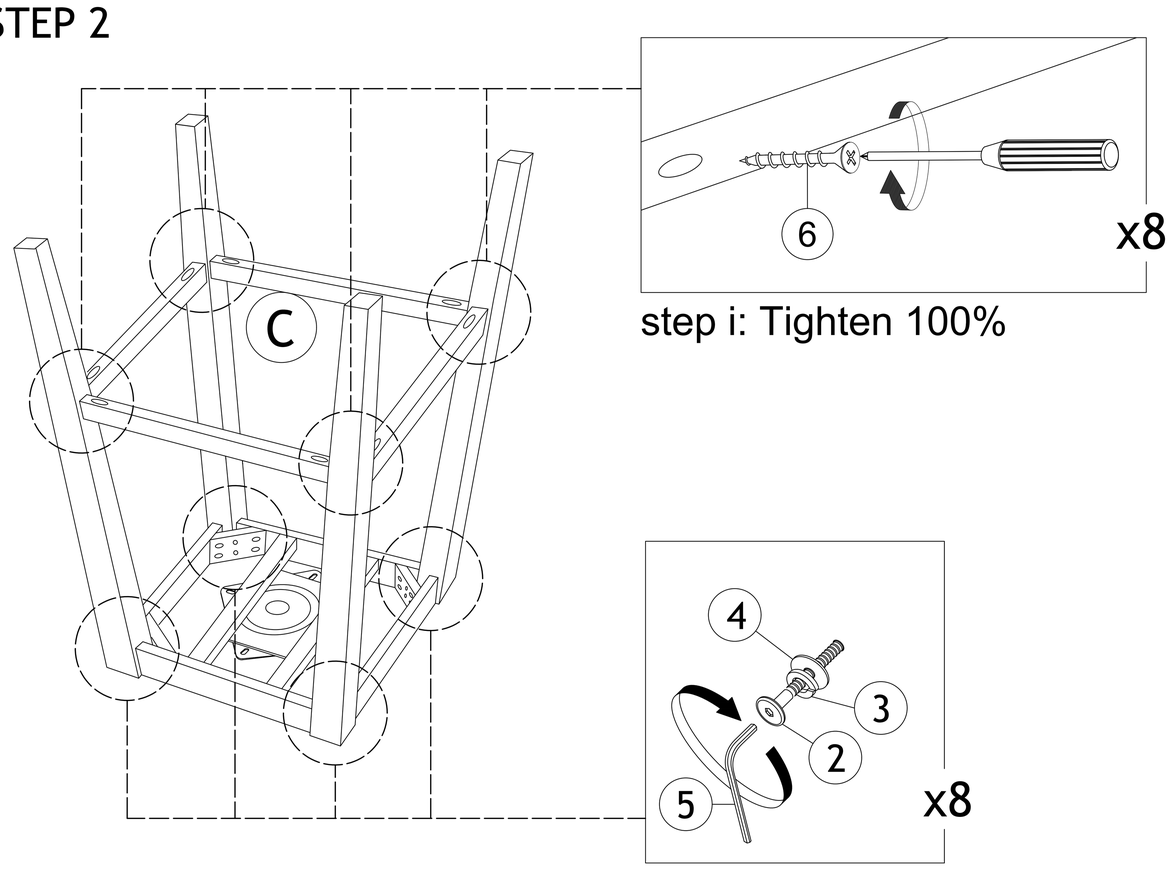

step i: Tighten 100%

step ii: Tighten 100%

STEP 3

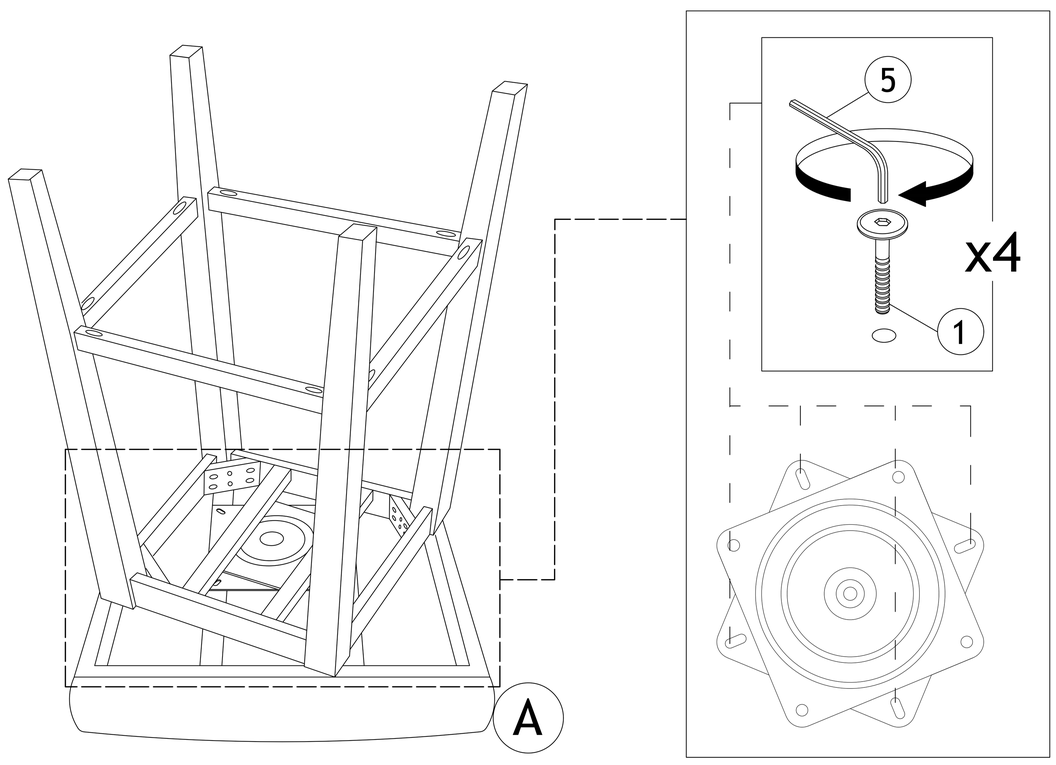

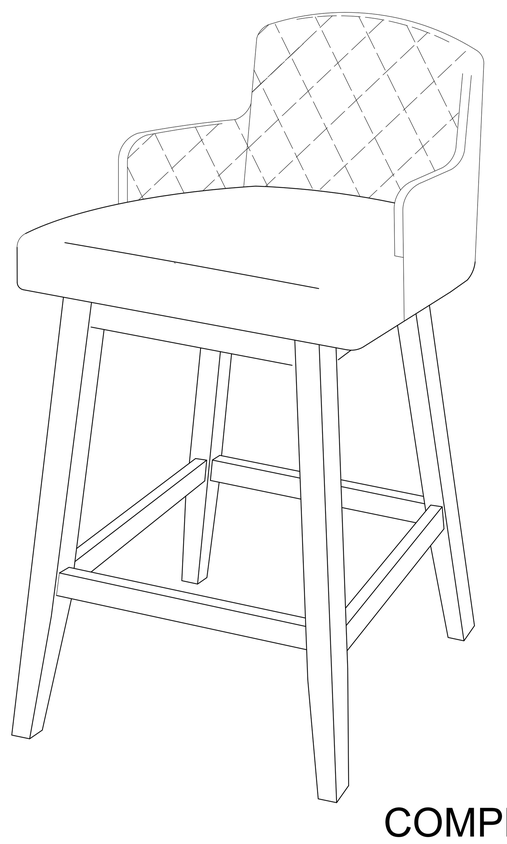

COMPLETED ASSEMBLY