ASSEMBLY INSTRUCTIONS

MODEL: BE25545-BS

Read this instruction carefully. Refer hardware and furniture parts list for guidance. Be sure all parts are complete before assembling. Place all wooden furniture part on a clean and flat soft surface to prevent scratches. Refer steps provided as assembling guide.

PART LIST		
ITEM	DESCRIPTION	QTY
A	Leg	1 PC
B	Footrest	4 PCS
C	X-cross with Swivel Plate	1 PC
D	Cushion Seat	1 PC

HARDWARE LIST		
ITEM	DESCRIPTION	QTY
1	JCBC Screw M6 x 25mm	4 PCS
2	JCBC Screw M6 x 35mm	4 PCS
3	JCBC Screw M6 x 45mm	4 PCS
4	Spring Washer M6 x 13mm	8 PCS
5	Flat Washer M6 x 16.5mm	4 PCS
6	Allen Key Small M4 x 110mm	1 PC
7	Wood Dowel M10 x 30mm	4 PCS

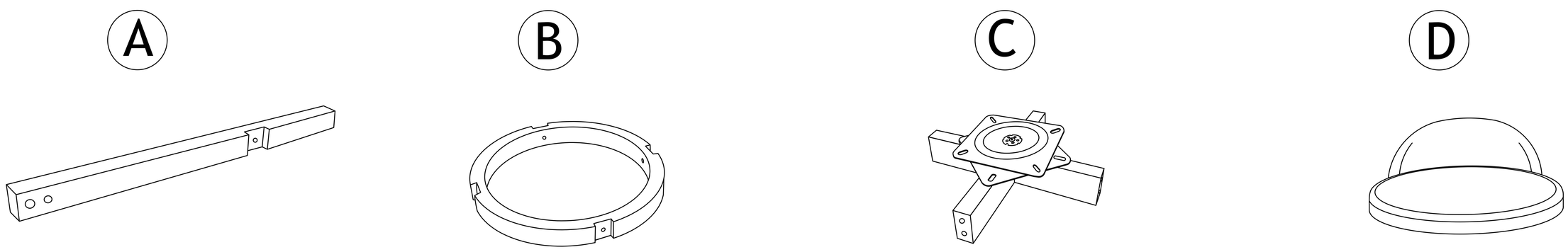

STEP 1

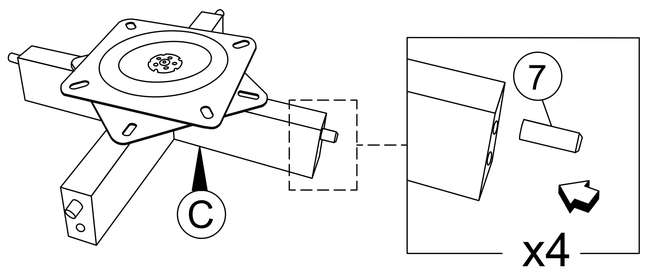

STEP 2

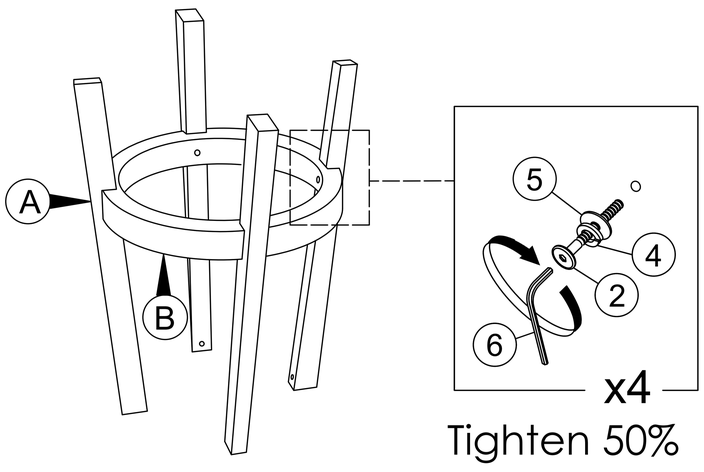

Tighten 50%

STEP 3

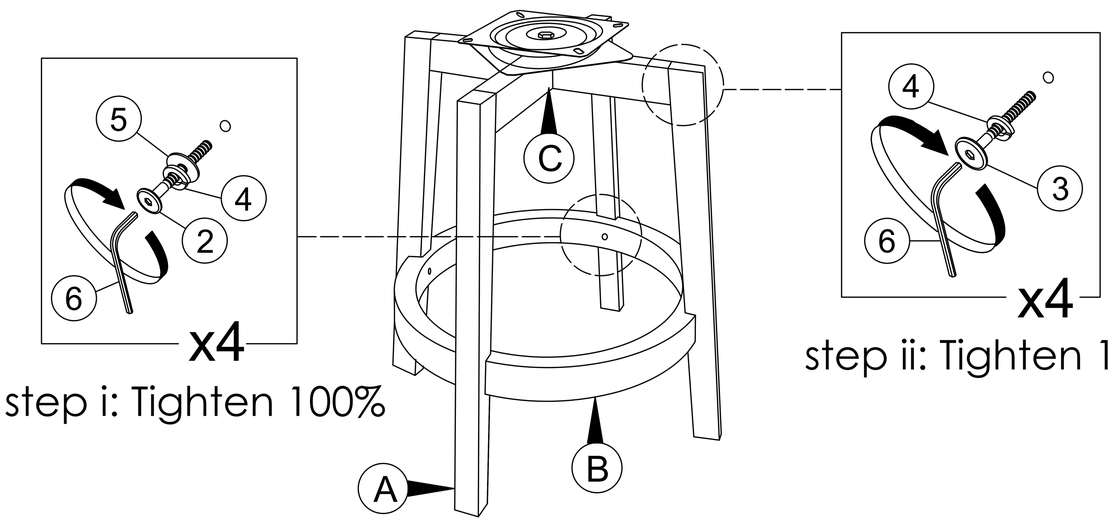

step i: Tighten 100%

step ii: Tighten 100%

Attach part(A) with part(C). Tighten part(A) with part(B) first, then tighten part(A) with part(C) completely.

STEP 4

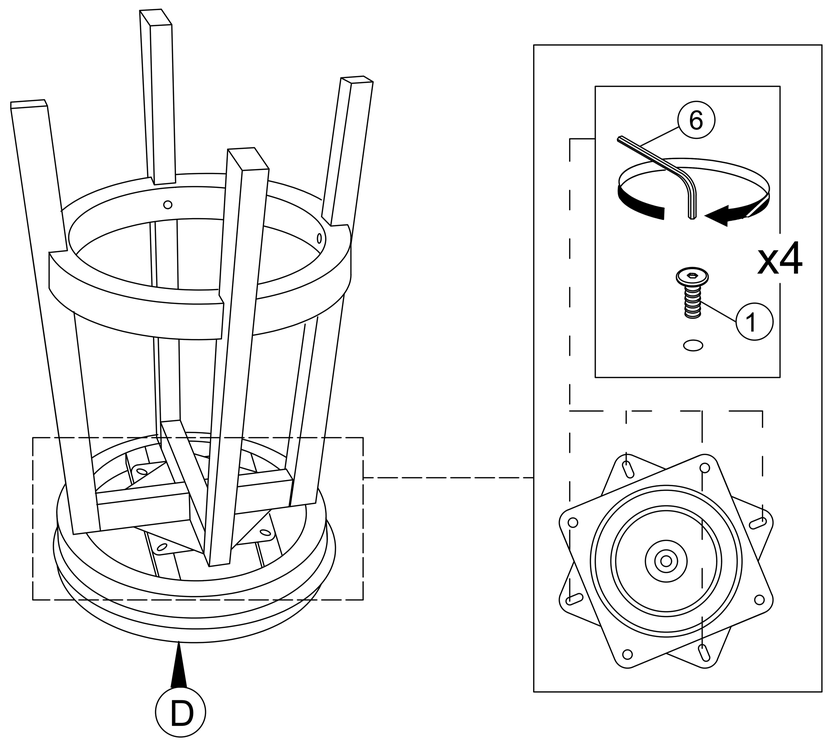

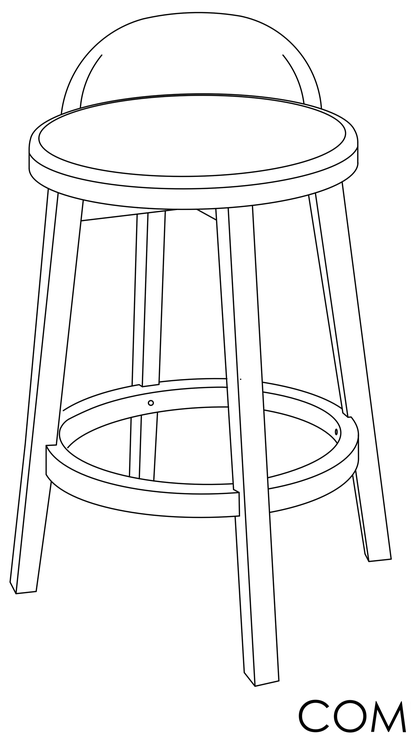

COMPLETE ASSEMBLY