ASSEMBLY INSTRUCTIONS

MODEL: BE25534PT

Read this instruction carefully. Refer hardware and furniture parts list for guidance. Be sure all parts are complete before assembling. Place all wooden furniture part on a clean and flat soft surface to prevent scratches. Refer steps provided as assembling guide.

PART LIST		
ITEM	DESCRIPTION	QTY
A	Table Top	1 SET
B	Leg (Right & Left)	4 PCS
C	Center Panel	2 SET

HARDWARE LIST		
ITEM	DESCRIPTION	QTY
1	JCBC Screw M6 x 60mm	16 PCS
2	Spring Washer M6 x 13MM	16 PCS
3	Flat Washer M7 x 19MM	16 PCS
4	Allen Key M4 x 55mm	1 PC
5	HEX NUT M8 x 14MM	8 PCS
6	Spring Washer M8 x 14MM	8 PCS
7	Flat Washer M8 x 22MM	8 PCS
8	OPEN-END WRENCH M12.8	1 PC
9	Adjuster M6 x 16.5mm	4 PCS

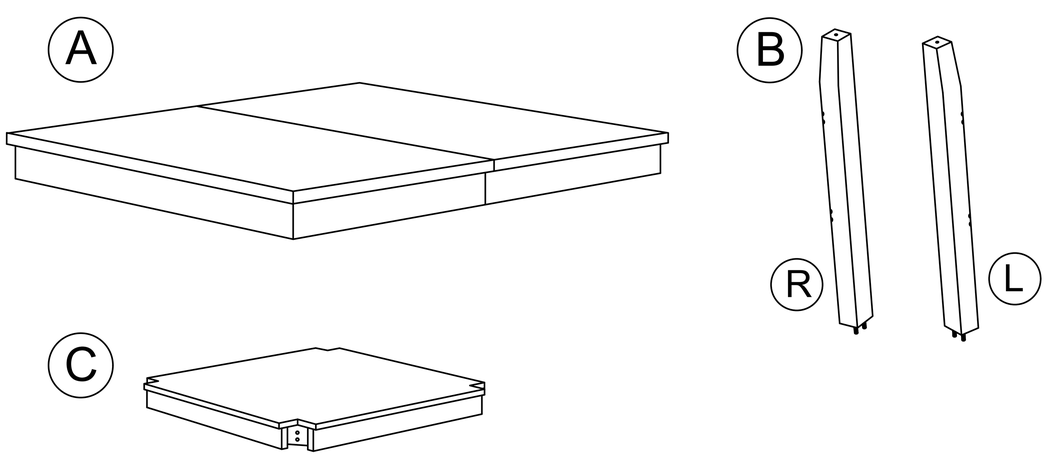

STEP 1

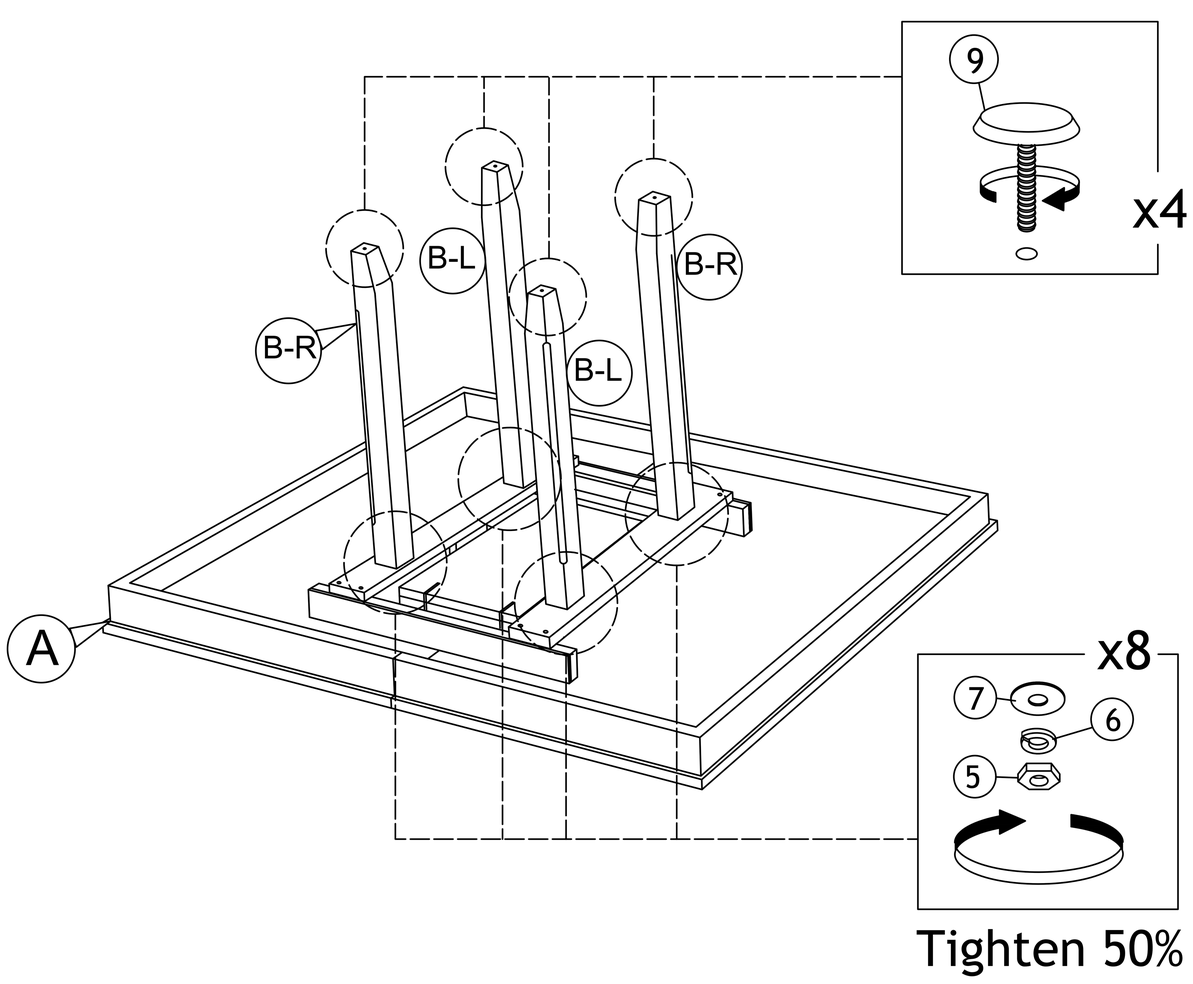

STEP 2

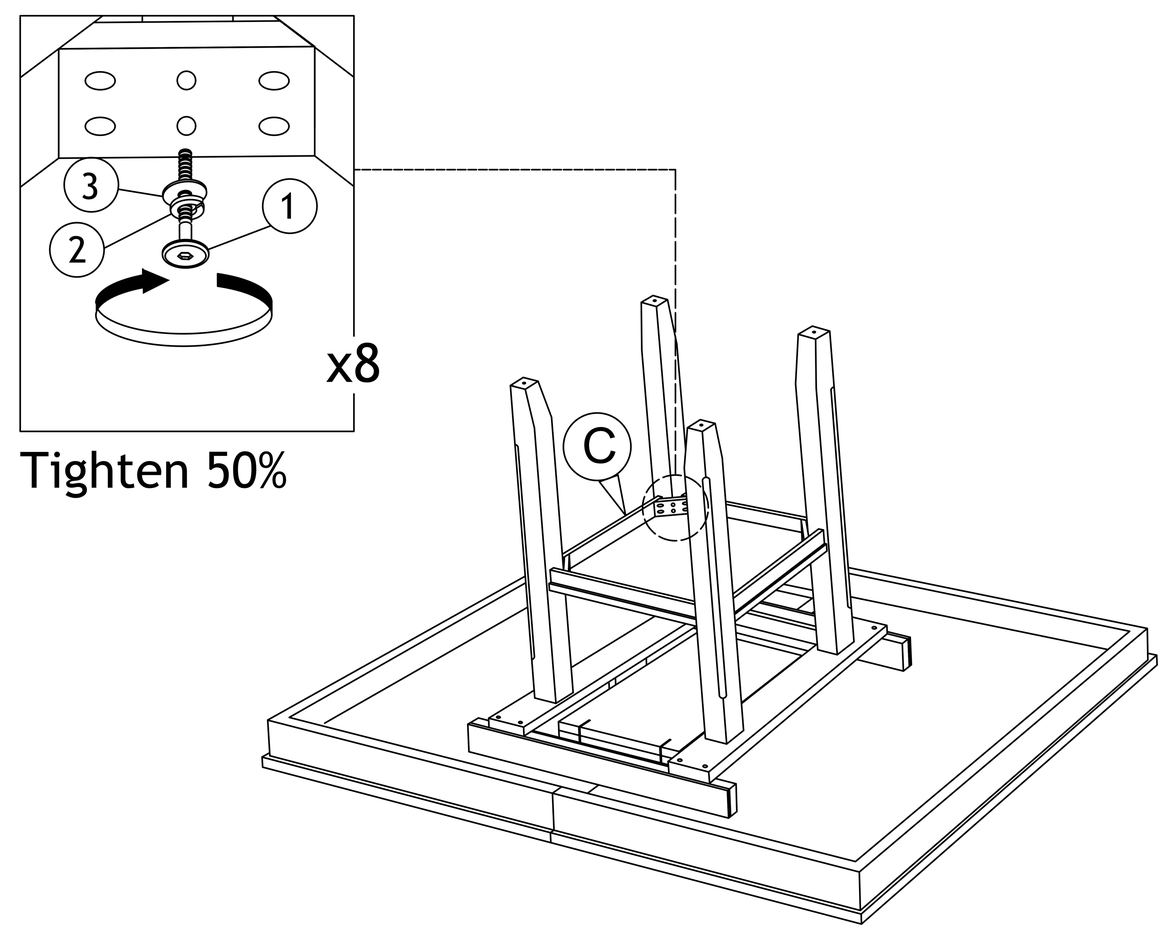

STEP 3

step ii: Tighten 100%

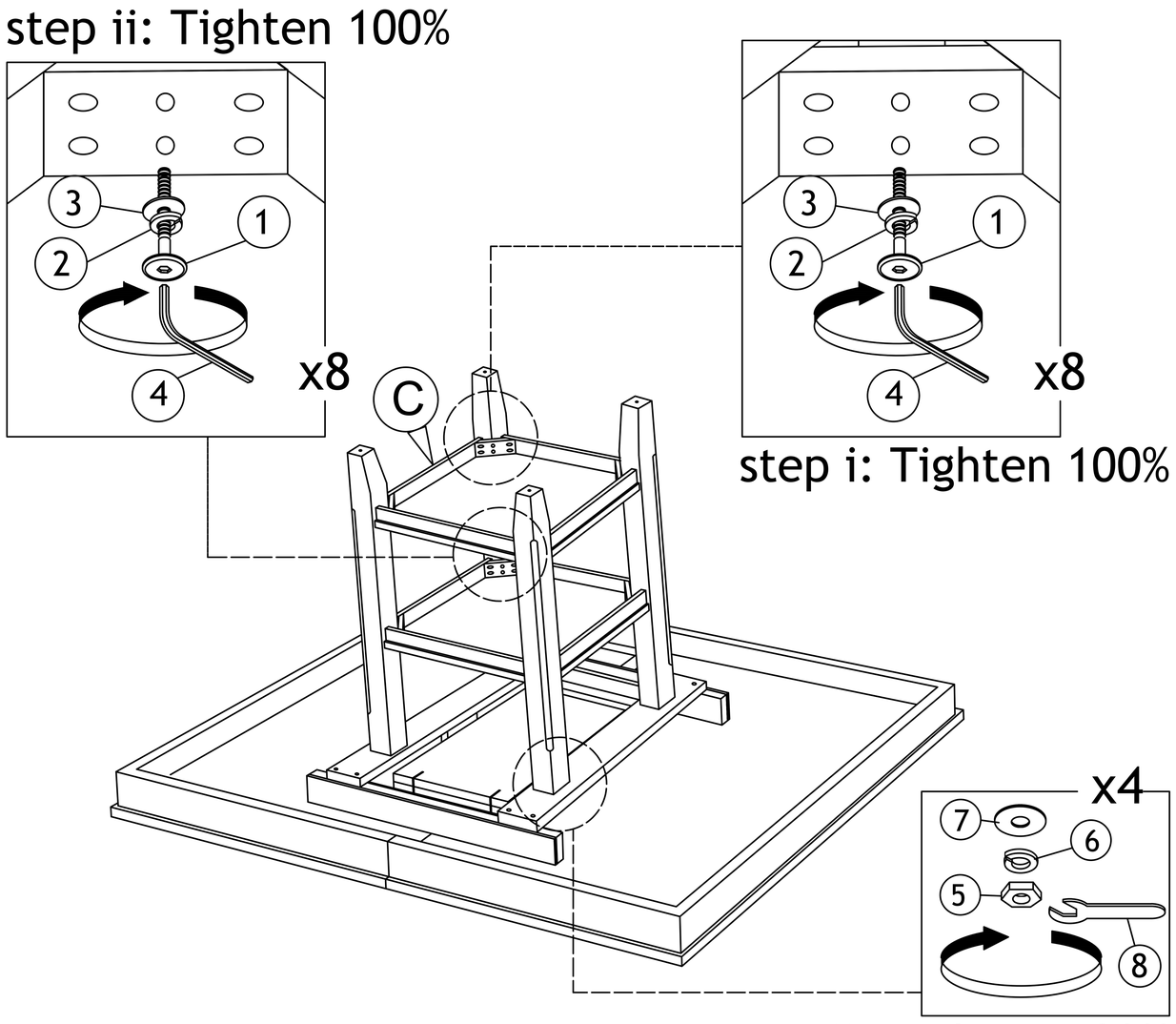

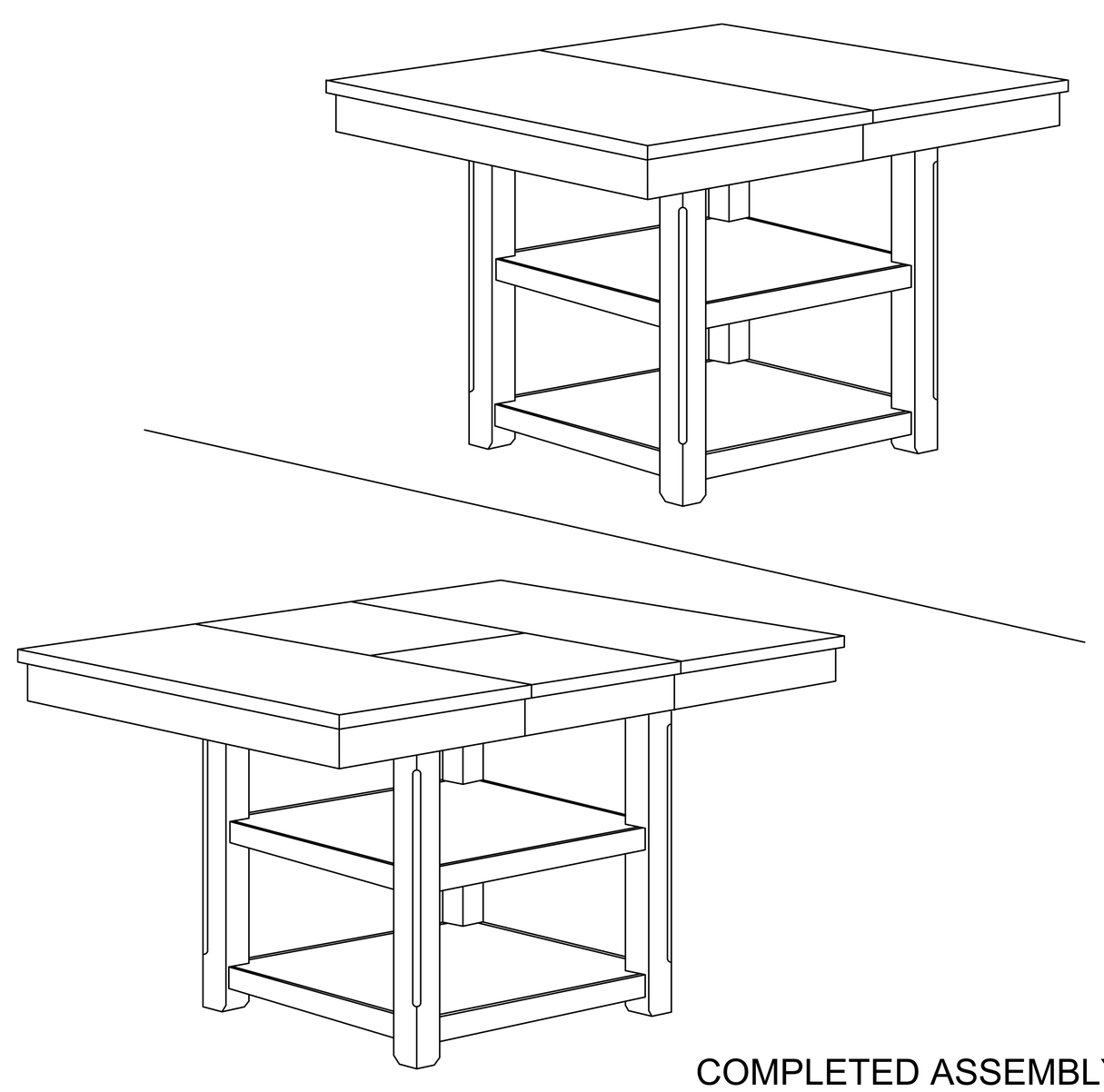

COMPLETED ASSEMBLY